SWIVEL CONNECTIONS

Swivel connectors for concrete removal

- Use for concrete removal with high flow rates (max. 100 ltr./min).

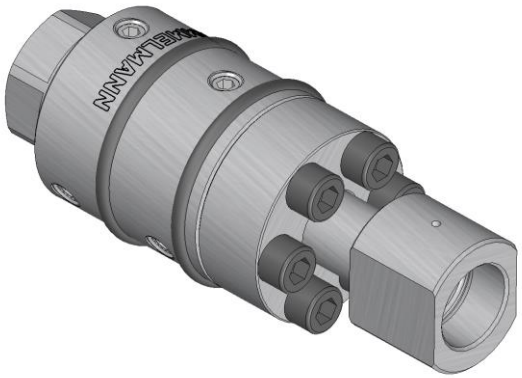

Technical data

Op. pressure max. [bar]	i/d [mm]	Material	Thread	Ø max. [mm]	Length [mm]	Weight [kg]	Code no.
3000	8	stainl. steel	M 30 x 2 M 30 x 2	69.6	179	2.9	**00.00057.0037**

Applicable Spir-Star high pressure hoses

NOTE!	**For further information see product handbook chapter 12.A!**

Accessory

Description	Operating pressure max. [bar]	i/d [mm]	Material	Thread	Length [mm]	Weight [kg]	Code no.
Double nipple	2800	8	stainl. steel	M 30 x 2 - M 24 x 1.5 DKO-S	56	0.24	**01.02981.0732**

HAMMELMANN®

© Copyright HAMMELMANN GmbH, Oelde, Germany. Rights reserved to modify design.